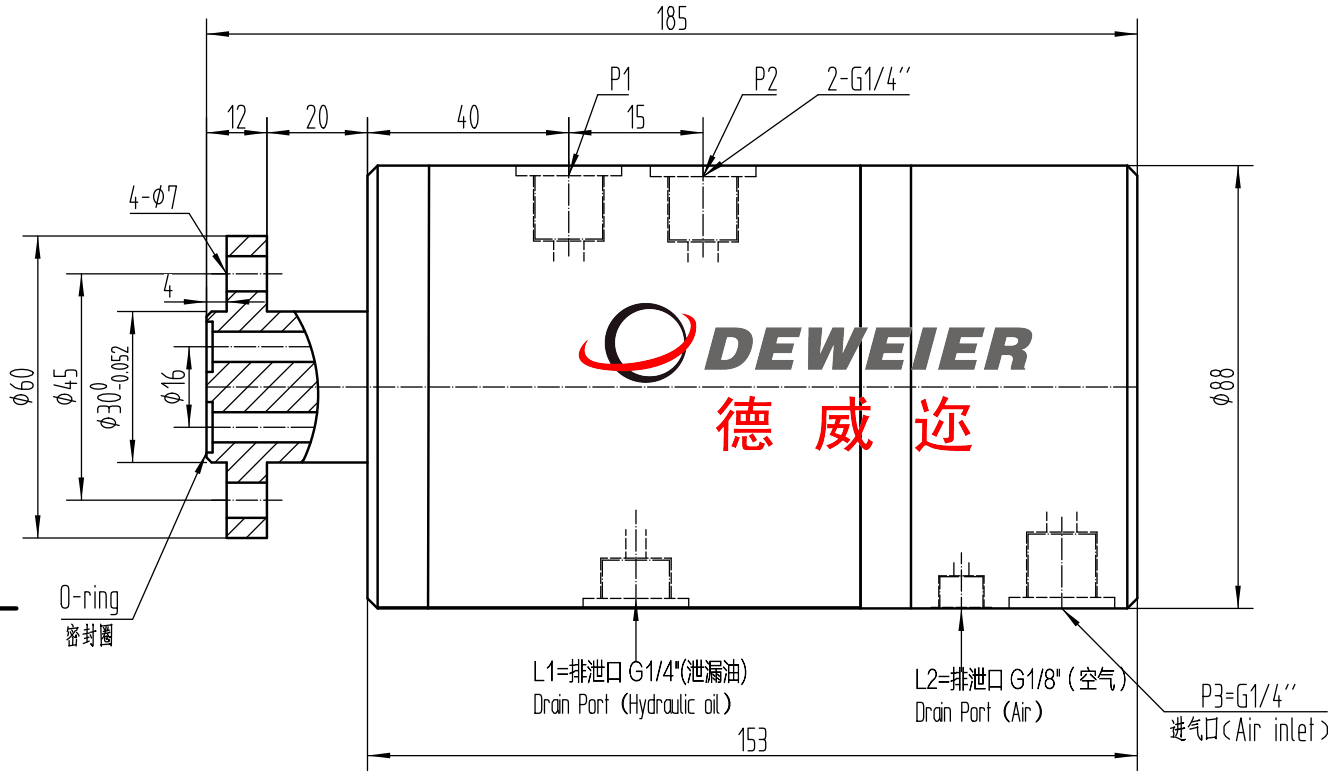

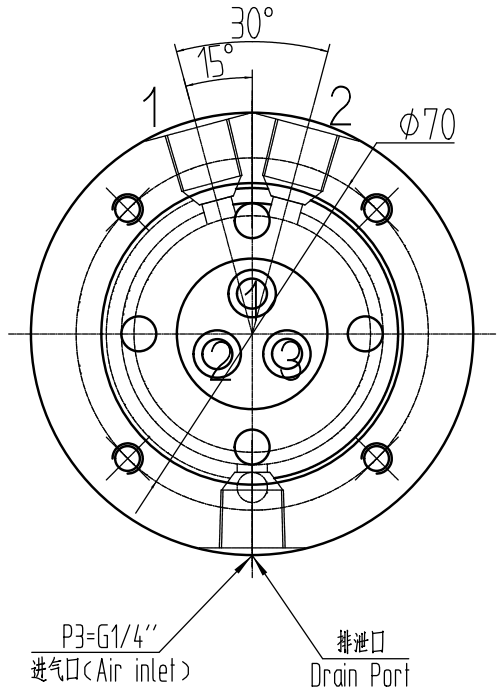

Product number: RMH-060030H2A1

Operating data:

1.Max pressure:3.0Mpa---- 21MPa;
2.Max speed: 3000RPM;
3.Temperature: -20/+80° C;
4.Medium:Hydraulic oil;

P1---P2: Hydraulic oil 2 1MPa;
P3: Air 1.1MPq;
L1: Drain Port (Hydraulic oil)
L2: Drain Port (Air)

Tel:0632-5822778 Fax: 0632-5601281
Dewel Machinery Technology Co.,Ltd

Remarks: This product adopts the gap sealing structure. The drain hole L must be connected to the return tank when the oil pipe is installed, and the oil return pipe can not be blocked to form pressure;

制图			Rotary joint	1:1.5
校核				
Dewel Machinery Technology Co.,Ltd			RMH-060030H2A1	